Field case for temperature transmitter Model TIF11

Applications

- Plant construction
- Process engineering
- General industrial applications
- Energy and power plant technology
- Chemical industry, oil and gas

Special features

- Robust case designs
- Numerous connection options
- Large selection of temperature transmitters can be fitted
- Explosion-protected versions (option)

Fig. left: Field case, round, with screw-on lid
Fig. right: Field case, rectangular

Description

Field cases of this series are available in various case variants. Plastic, stainless steel and aluminium versions can be specified. They can be combined with a large number of temperature transmitters.

Direct wall mounting is the standard fixing method for these field cases. An optional pipe mounting kit is also available for fitting to pipes with a diameter of 1 ... 2".

Data sheets showing similar products:
HART® field temperature transmitters; models TIF50, TIF52; see data sheet TE 62.02
Digital temperature transmitter for resistance sensors; models T15.H, T15.R; see data sheet TE 15.01
Digital temperature transmitter for thermocouples; models T16.H, T16.R; see data sheet TE 16.01
Digital temperature transmitter with HART® protocol; models T32.1S, T32.3S; see data sheet TE 32.04
Fieldbus temperature transmitter for FOUNDATION™ Fieldbus and PROFIBUS® PA; model T53.10; see data sheet TE 53.01

Explosion protection (option)

- TIF11-S (without explosion protection)
- TIF11-I (Ex i, intrinsically safe)
- TIF11-F (Ex d, with flameproof enclosure)

Cable entry	Explosion protection			
	without	Ex i (gas) Zone 0, 1, 2	Ex i (dust) Zone 20, 21, 22	Ex db (gas) Zone 1
Plastic cable gland	x	x	-	-
Plastic cable gland, Ex e (blue)	x	x	x	-
Plastic cable gland, Ex e (black)	x	x	x	-
Brass cable gland, nickel-plated	x	x	x	-
Brass cable gland, nickel-plated, Ex e	x	x	x	-
Stainless steel cable gland	x	x	x	-
Stainless steel cable gland, Ex e	x	x	x	-
Stainless steel cable gland, Ex d	-	-	-	x
Plain threaded	x	x	x [2)]	x [2)]
Junction box, M12 x 1 (4-pin)	x	x [1)]	-	-
Plug screw	x	x	x	x
Sealing plugs for transport	not applicable, transport protection			

For arrangement/suitability of cable glands to the cases, see page 6

1) With appropriate mating connector connected
2) Suitable cable gland required for operation

Approvals

Model TIF11-S

Logo	Description	Country
CE	**EU declaration of conformity** ■ EMC directive [1)] EN 61326 emission (group 1, class B) and interference immunity (industrial application) ■ RoHS directive	European Union

1) Only for built-in WIKA transmitter. When using third-party transmitters, their EU declarations of conformity are valid.

The field transmitter model TIF11-S consists of a case without explosion protection. Within the case can be installed suitable temperature transmitters with U_{max} = DC 60 V (e.g. SELV power supply).

Model TIF11-F

Logo	Description	Country
CE Ex	**EU declaration of conformity** ■ EMC directive [1)] EN 61326 emission (group 1, class B) and interference immunity (industrial application) ■ RoHS directive ■ ATEX directive (option) Hazardous areas - Ex d Zone 1 gas II 2G Ex db IIC T4/T5/T6 Gb	European Union
IEC IECEx	**IECEx (option) - in conjunction with ATEX** Hazardous areas - Ex d Zone 1 gas Ex db IIC T4/T5/T6 Gb	International
EAC Ex	**EAC (option)** Hazardous areas [2)] - Ex d Zone 1 gas 1Ex d IIC T6 ... T4 Gb X	Eurasian Economic Community

1) Only for built-in WIKA transmitter. When using third-party transmitters, their EU declarations of conformity are valid.
2) The installation conditions for the transmitters and displays must be considered for the final application.

The model TIF11-F field transmitter consists of a case with ignition protection type “flameproof enclosure”. Within the case can be installed suitable temperature transmitters with U_{max} = DC 30 V and P_{max} = 2 W.

Model TIF11-I

Logo	Description	Country
CE Ex	**EU declaration of conformity** ■ EMC directive [1)] EN 61326 emission (group 1, class B) and interference immunity (industrial application) ■ RoHS directive ■ ATEX directive (option) Hazardous areas - Ex i Zone 0 gas II 1G Ex ia IIC T* Ga Zone 1 gas II 2G Ex ia IIC T* Gb Zone 1 gas II 2G Ex ib IIC T* Gb Zone 1 mounting to zone 0 gas II 2(1)G Ex ia [ia Ga] IIC T* Gb Zone 20 dust II 1D Ex ia IIIC T135°C Da Zone 21 dust II 2D Ex ia IIIC T135°C Db Zone 21 dust II 2D Ex ib IIIC T135°C Db Zone 21 mounting to zone 20 dust II 2(1)D Ex ia [ia Da] IIIC T135 °C Db	European Union

Logo	Description			Country
	IECEx (option) - in conjunction with ATEX Hazardous areas			International
	- Ex i	Zone 0 gas	Ex ia IIC T4/T5/T6 Ga	
		Zone 1 gas	Ex ia IIC T4/T5/T6 Gb	
		Zone 1 gas	Ex ib IIC T4/T5/T6 Gb	
		Zone 1 mounting to zone 0 gas	Ex ia [ia Ga] IIC T4/T5/T6 Gb	
		Zone 20 dust	Ex ia IIIC T135°C Da	
		Zone 21 dust	Ex ia IIIC T135°C Db	
		Zone 21 dust	Ex ib IIIC T135°C Db	
		Zone 21 mounting to zone 20 dust	Ex ia [ia Da] IIIC T135 °C Db	
	EAC (option) Hazardous areas [2]			Eurasian Economic Community
	- Ex i	Zone 0 gas	0 Ex ia IIC T6 ... T4 Ga X	
		Zone 1 gas	1 Ex ia IIC T6 ... T4 Gb X	
		Zone 1 gas	1 Ex ib IIC T6 ... T4 Gb X	
		Zone 1 mounting to zone 0 gas	1 Ex ia [ia Ga] IIC T6 ... T4 Gb X	
		Zone 20 dust	Ex ia IIIC T80 ... T135 °C Da X	
		Zone 21 dust	Ex ia IIIC T80 ... T135 °C Db X	
		Zone 21 dust	Ex ib IIIC T80 ... T135 °C Db X	
		Zone 21 mounting to zone 20 dust	Ex ia [ia Da] IIIC T80 ... T135 °C Db X	

1) Only for built-in WIKA transmitter. When using third-party transmitters, their EU declarations of conformity are valid.
2) The installation conditions for the transmitters and displays must be considered for the final application.

The field transmitter model TIF11-I consists of a case which is suitable for ignition protection type “intrinsic safety”. Within the case, an appropriately certified temperature transmitter can be installed. For specifications and safety-related characteristics regarding explosion protection, please refer to the operating instructions of the respective transmitter.

Manufacturer’s information and certificates

Logo	Description
-	**China RoHS directive**

Approvals and certificates, see website

With the installation of third-party products and/or transmitters with bus protocol:
→ see safety-related characteristics for the respective transmitter

For ATEX/IECEx approval:
Third-party transmitter with own, suitable approval possible

For delivery in CIS states, due to the metrology certificates, a WIKA transmitter must be built in!
→ **For specifications and safety-related characteristics regarding explosion protection please see operating instructions of the respective transmitter.**

Instrument versions

Specifications	Case	
	Round, with screw-on lid (head 5/6000 F, 5/6000 S)	Rectangular
Material	■ Aluminium ■ Stainless steel	■ Plastic [1)] ■ Aluminium ■ Stainless steel
Surface	Aluminium: Blue, lacquered (RAL 5022) Stainless steel: Natural finish	Blank
Cable outlet thread size	■ M20 x 1.5 ■ ½ NPT	M20 x 1.5 others on request
IP ingress protection (max.)	IP66	IP66
Explosion protection (option)	■ Ex i ■ Ex d	Ex i

1) Not for explosion protection

Dimensions in mm

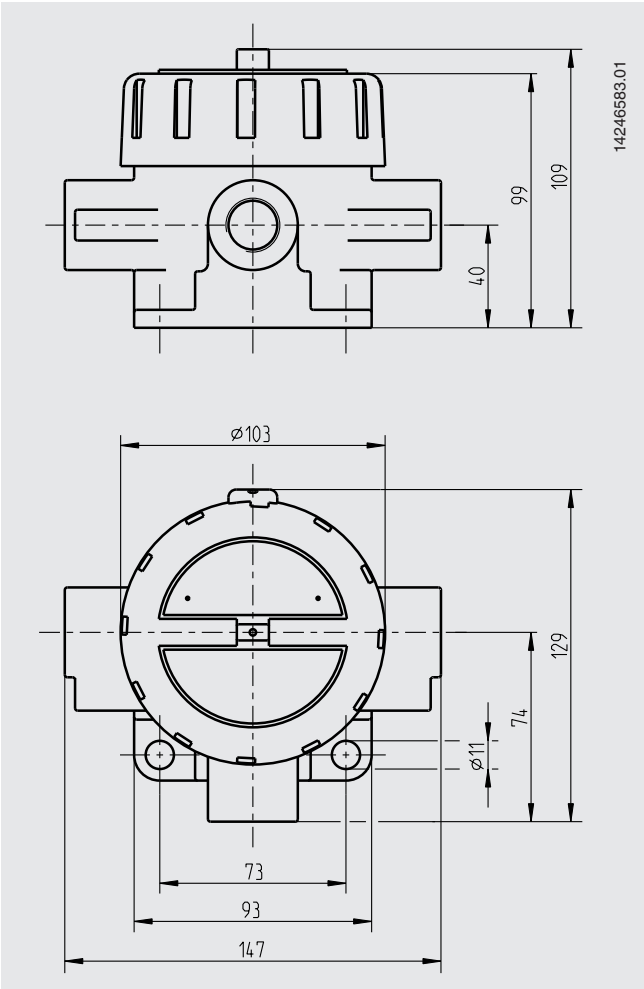

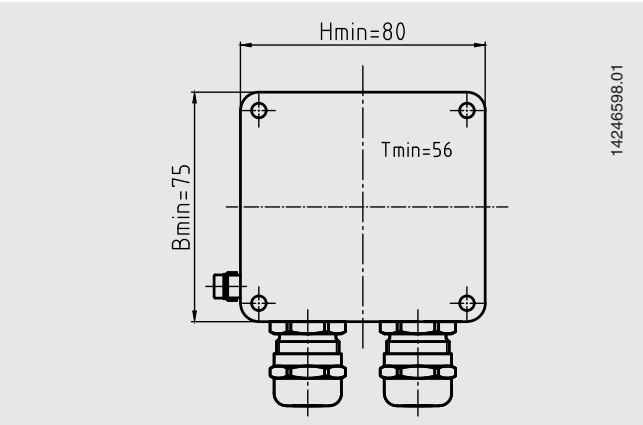

Figures show the minimum dimensions.
Other case dimensions on request

Cable entry

Cable entry	For cable Ø	Thread size	Colour	Ingress protection (max.)	Min./max. ambient temperature
Plastic cable gland	6 ... 10 mm	M20 x 1.5	Black or grey	IP66	-40 ... +80 °C
Plastic cable gland, Ex e	6 ... 10 mm	M20 x 1.5	Light blue	IP66	-20 ... +80 °C (standard) -40 ... +70 °C (option)
Plastic cable gland, Ex e	6 ... 10 mm	M20 x 1.5	Black	IP66	-20 ... +80 °C (standard) -40 ... +70 °C (option)
Brass cable gland, nickel-plated	6 ... 12 mm	M20 x 1.5 or ½ NPT	Blank	IP66	-60 [1] / -40 ... +80 °C
Brass cable gland, nickel-plated, Ex e	6 ... 12 mm	M20 x 1.5 or ½ NPT	Blank	IP66	-60 [1] / -40 ... +80 °C
Stainless steel cable gland	7 ... 12 mm	M20 x 1.5 or ½ NPT	Blank	IP66	-60 [1] / -40 ... +80 °C
Stainless steel cable gland, Ex e	7 ... 12 mm	M20 x 1.5 or ½ NPT	Blank	IP66	-60 [1] / -40 ... +80 °C
Stainless steel cable gland, Ex d	7 ... 12 mm	M20 x 1.5 or ½ NPT	Blank	IP66	-60 [1] / -40 ... +80 °C
Plain threaded	-	M20 x 1.5 or ½ NPT	-	IP00	-
Junction box, M12 x 1 (4-pin)	-	M20 x 1.5	-	IP65	-40 ... +80 °C
Plug screw	-	M20 x 1.5 or ½ NPT	Blank	IP66	-60 ... +80 °C
Sealing plugs for transport	-	M20 x 1.5 or ½ NPT	Transparent	-	-40 ... +80 °C

Cable entry	For cable Ø	Thread size	Colour	Ingress protection (max.)	Min./max. ambient temperature
Plastic cable gland	6 ... 10 mm	M20 x 1.5	Black or grey	IP66	-40 ... +80 °C
Plastic cable gland, Ex e	6 ... 10 mm	M20 x 1.5	Light blue	IP66	-20 ... +80 °C (standard) -40 ... +70 °C (option)
Plastic cable gland, Ex e	6 ... 10 mm	M20 x 1.5	Black	IP66	-20 ... +80 °C (standard) -40 ... +70 °C (option)
Brass cable gland, nickel-plated	6 ... 12 mm	M20 x 1.5	Blank	IP66	-60 [1] / -40 ... +80 °C
Brass cable gland, nickel-plated, Ex e	6 ... 12 mm	M20 x 1.5	Blank	IP66	-60 [1] / -40 ... +80 °C
Stainless steel cable gland	7 ... 12 mm	M20 x 1.5	Blank	IP66	-60 [1] / -40 ... +80 °C
Stainless steel cable gland, Ex e	7 ... 12 mm	M20 x 1.5	Blank	IP66	-60 [1] / -40 ... +80 °C
Plain threaded	-	M20 x 1.5	-	IP00	-
Junction box, M12 x 1 (4-pin)	-	M20 x 1.5	-	IP65	-40 ... +80 °C
Plug screw	-	M20 x 1.5	Blank	IP66	-60 ... +80 °C
Sealing plugs for transport	-	M20 x 1.5	Transparent	-	-40 ... +80 °C

1) Special version on request (only available without explosion protection or with specific approvals). other temperatures on request

Number and position of cable inlets / cable glands after consultation

Transmitter




Output signal 4 ... 20 mA, HART® protocol, FOUNDATION™ Fieldbus and PROFIBUS® PA				
Transmitter (selectable versions)	**Model T15 (for RTD)**	**Model T16 (for TC)**	**Model T32**	**Model T53**
Data sheet	**TE 15.01**	**TE 16.01**	**TE 32.04**	**TE 53.01**
Output				
4 ... 20 mA	x	x	x	-
HART® protocol	-	-	x	-
FOUNDATION™ Fieldbus and PROFIBUS® PA	-	-	-	x
Explosion protection	Optional	Optional	Optional	Standard

For detailed specifications see respective transmitter data sheet

Mounting of two or more transmitters only possible without explosion protection.
Fitting of third-party products possible, suitable approval required.
Mounting position, number of transmitters and their fixing method on request.

Functional safety (option)
with temperature transmitter model T32

In safety-critical applications, the entire measuring chain must be taken into consideration in terms of the safety parameters. The SIL classification allows the assessment of the risk reduction achieved by the safety installations.

Selected TIF11 field cases, in combination with a suitable temperature transmitter (e.g. model T32.1S, TÜV certified SIL version for protection systems developed in accordance with IEC 61508), are suitable as sensors for safety functions to SIL 2.

Operating conditions

Ambient and storage temperature
-60 [1] / -40 ... +80 °C

1) Special version on request (only available with specific approvals)

Other abient and storage temperatures on request

Accessories
(suitable for the respective transmitter model)

Models T15 and T16

Model	Description	Order number
Programming unit Model PU-548 	■ Easy to use ■ LED status display ■ Compact design ■ No further voltage supply needed, neither for the programming unit nor for the transmitter ■ Incl. 1 model magWIK magnetic quick connector	14231581
Magnetic quick connector magWIK 	■ Replacement for crocodile clips and HART® terminals ■ Fast, safe and tight electrical connection ■ For all configuration and calibration processes	14026893

Model T32.xS

Model	Description	Order number
Programming unit, model PU-H		
VIATOR® HART® USB 	HART® modem for USB interface	11025166
VIATOR® HART® USB PowerXpress™ 	HART® modem for USB interface	14133234
VIATOR® HART® RS-232 	HART® modem for RS-232 interface	7957522
VIATOR® HART® Bluetooth® Ex 	HART® modem for Bluetooth interface, Ex	11364254
Magnetic quick connector magWIK 	■ Replacement for crocodile clips and HART® terminals ■ Fast, safe and tight electrical connection ■ For all configuration and calibration processes	14026893

Common accessories

Model	Description	Order number
Adapter 	■ Suitable for TS 35 per DIN EN 60715 (DIN EN 50022) or TS 32 per DIN EN 50035 for mounting on a DIN rail ■ Material: Plastic / stainless steel ■ Dimensions: 60 x 20 x 41.6 mm	3593789
Adapter 	■ Suitable for TS 35 per DIN EN 60715 (DIN EN 50022) for mounting on a DIN rail (2 adapters required per transmitter) ■ Material: Steel, tin-plated ■ Dimensions: 49 x 8 x 14 mm	3619851

Configuration software

■ WIKAsoft-TT (for T15 and T16)

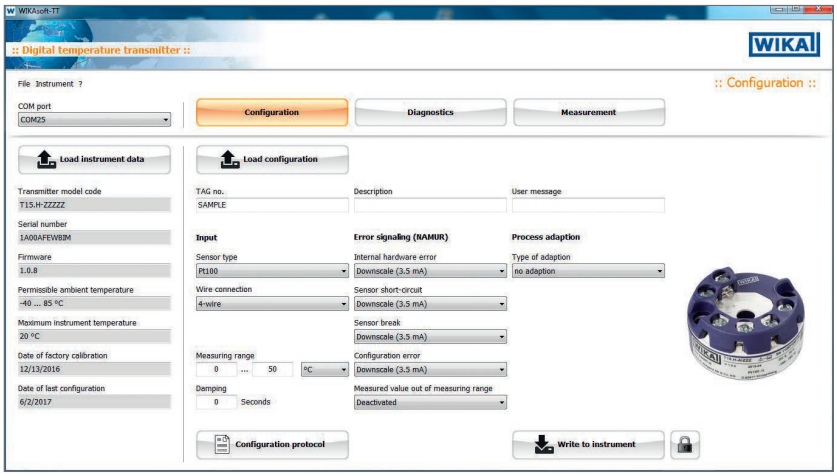

■ WIKA_T32

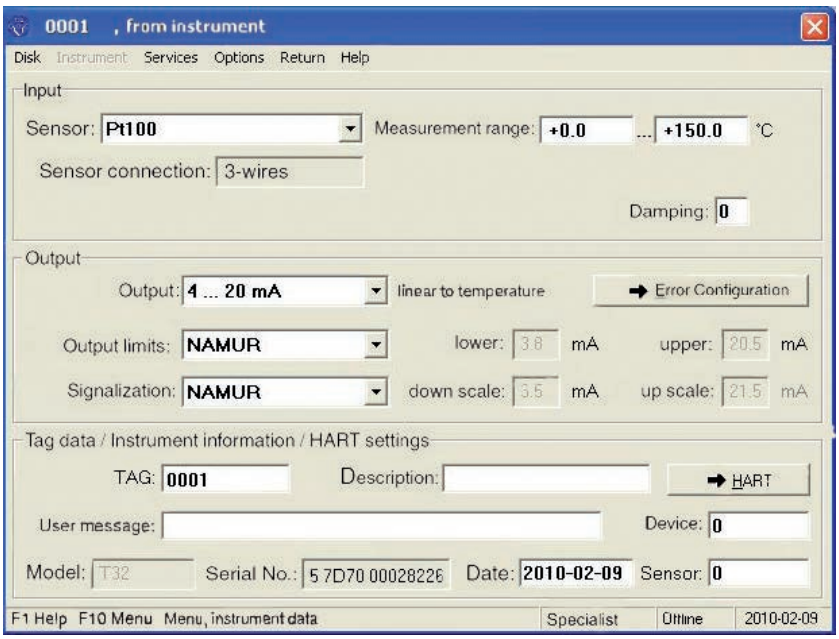

Certificates (option)

Certification type	Measuring accuracy of the built-in transmitter	Material certificate
2.2 test report	x	-
3.1 inspection certificate	x	-
DKD/DAkkS calibration certificate	x	-

Approvals and certificates, see website

Ordering information

Model / Explosion protection / Case material / Transmitter / Cable bushings / Threaded connection for cable bushing / Certificates / Options

WIKA Alexander Wiegand SE & Co. KG
Alexander-Wiegand-Straße 30
63911 Klingenberg/Germany
Tel. +49 9372 132-0
Fax +49 9372 132-406
info@wika.de
www.wika.de